MATERIALS LIST		
QTY.	RSI PART#	DESCRIPTION
66"	303000	Wire 18 Ga. Red
66"	303001	Wire 18 Ga. Green
120"	303002	Wire 18 Ga. Violet
48"	303003	Wire 18 Ga. Yellow
75"	303004	Wire 18 Ga. Black
48"	303005	Wire 18 Ga. White
72"	303006	Wire 18 Ga. Blue
18"	303007	Wire 18 Ga. Orange
1	303103	Mixed Air Sensor
1	303113	#1/HW Motor - M7215A
		Logic Module - W7212A
1	303140	Enthalpy Control
1	303603	Male ¼ Quick Disc. Insul (Red)
1	303604	¼ Slip-on Adaptor Male
25	303605	Female ¼ Quick Disc. (Red)
1	303616	Female ¼ Quick Disc. (Blue)
10	303620	Wire Ties 4" L
1	303903	9 Cir Male Plug
1	303904	9 Cir Female Cap
8	303912	Male Pin
8	303913	Female Socket

HARNESS DETAIL

E# = WIRE END DESIGNATION

E2 STUD #6 18 Ga. Wire
E3 Female ¼ Quick Disc.
E4 Male ¼ Quick Disc. Insul
E6 Wire Nut

COMPONENT CODE

Economizer

C7400A	Fresh Air Sensor
C7150B	Mixed Air Sensor
W7212A	Logic Module
M7215A	Damper Actuator

WIRE COLOR CODE

BLK	Black	BLU	Blue
GRN	Green	ORN	Orange
RED	Red	VIO	Violet
WHT	White	YEL	Yellow

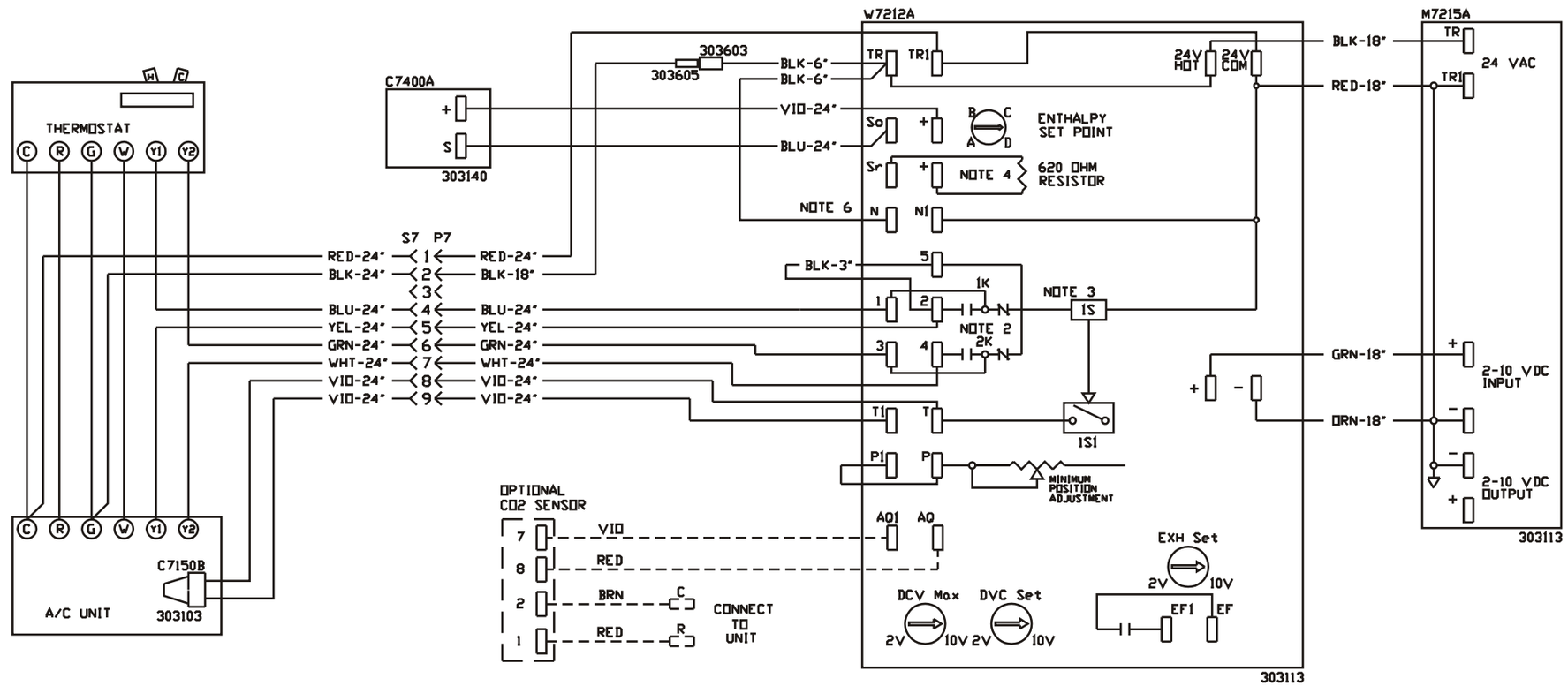

Notes:

1. Unit wiring shown as reference only. Check unit wiring for actual unit wiring.
2. Relays 1K and 2K actuate when the Outdoor Air Enthalpy is higher than the Return Air Enthalpy.
3. 1S is an electronic switch which closes when powered by a 24 VAC input.
4. Factory installed resistor should be removed only if C7400 Differential Enthalpy Sensor is added.
5. Y2 must be energized for the compressor to operate.
6. "N" terminal used for occupied mode. Remove jumper when night setback control utilized. 24v must be applied for occupied mode operation.

Modulating Economizer for Trane
YCC/YCY/YCX 048F-H, 060F-M / TCC/WCC 048-060F
TCY/WCY 048-060F / YCZ 050-060G / WCZ 060 Units

Rooftop Systems, Inc.
2405 McIver Lane
Carrollton, Texas 75006
Phone (972) 247-7447
Fax (972) 243-0940

Date: April 6, 2004
Supercedes: 02-06-04
Drawn by:
Unit # 70-364-13
Diagram# 36413W