MATERIALS LIST		
QTY.	RSI PART#	DESCRIPTION
6"	303000	Wire 18 Ga. Red
228"	303001	Wire 18 Ga. Green
58"	303003	Wire 18 Ga. Yellow
6"	303004	Wire 18 Ga. Black
6"	303005	Wire 18 Ga. White
52"	303006	Wire 18 Ga. Blue
6"	303007	Wire 18 Ga. Orange
6"	303015	Wire 18 Ga. Black/Red
236"	303051	Wire 14 Ga. Red
236"	303053	Wire 14 Ga. Yellow
236"	303054	Wire 14 Ga. Blue
1	303371	Fuse Holder
3	303387	Fuse 2 AMP
1	303405	Contactor - 30 AMP 3-Pole 3-ph 24V Coil
1	303423	Transformer - 120/208/240/575 PRI 24 V
1	303464	Fan Blade - F07H07-1434 x ⅝ ST CW
1	303481	Auxillary Switch Kit
3	303598	Ring Grd.
2	303599	Pigtail Connector
4	303605	Female ¼" Quick Disc. (Red)
4	303609	Wire Nut (Orange)
12	303612	Spade 16/14 Ga. Wire
20	303620	Wire Ties - 3 ¾" L
1	303698	Motor - ½ HP 1800 RPM (575V)
1	303906	AMP 4 Cir Plug Conn. Male
1	303907	AMP 4 Cir Cap Conn. Female
8	303912	AMP Pin Contact Male
4	303913	AMP Socket Contact Female
1	303915	AMP 6 Cir Plug Conn. Male

HARNESS DETAIL

E# = WIRE END DESIGNATION
E2 STUD #6 18 Ga. Wire
E3 Female ¼ Quick Disc.
E4 Male ¼ Quick Disc. Insul
E6 Wire Nut Size 73B

HARNESS LEADS ARE 14 GA. WIRE WITH NO END DESIGNATION

COMPONENT CODE

C1	Contactor
ES1	End Switch
FB	Fuse Block
FM	Fan Motor
GRD	Ground
P1	Fan Plug Male
P2	Unit Plug Male
S1	Control Box Female

WIRE COLOR CODE

BK/RD	Black/Red	BLK	Black
BLU	Blue	BRN	Brown
GRN	Green	ORG	Orange
RED	Red	VIO	Violet
YEL	Yellow	WHT	White

Revision	Change	Date
A	Added See Note 1	07-01-09

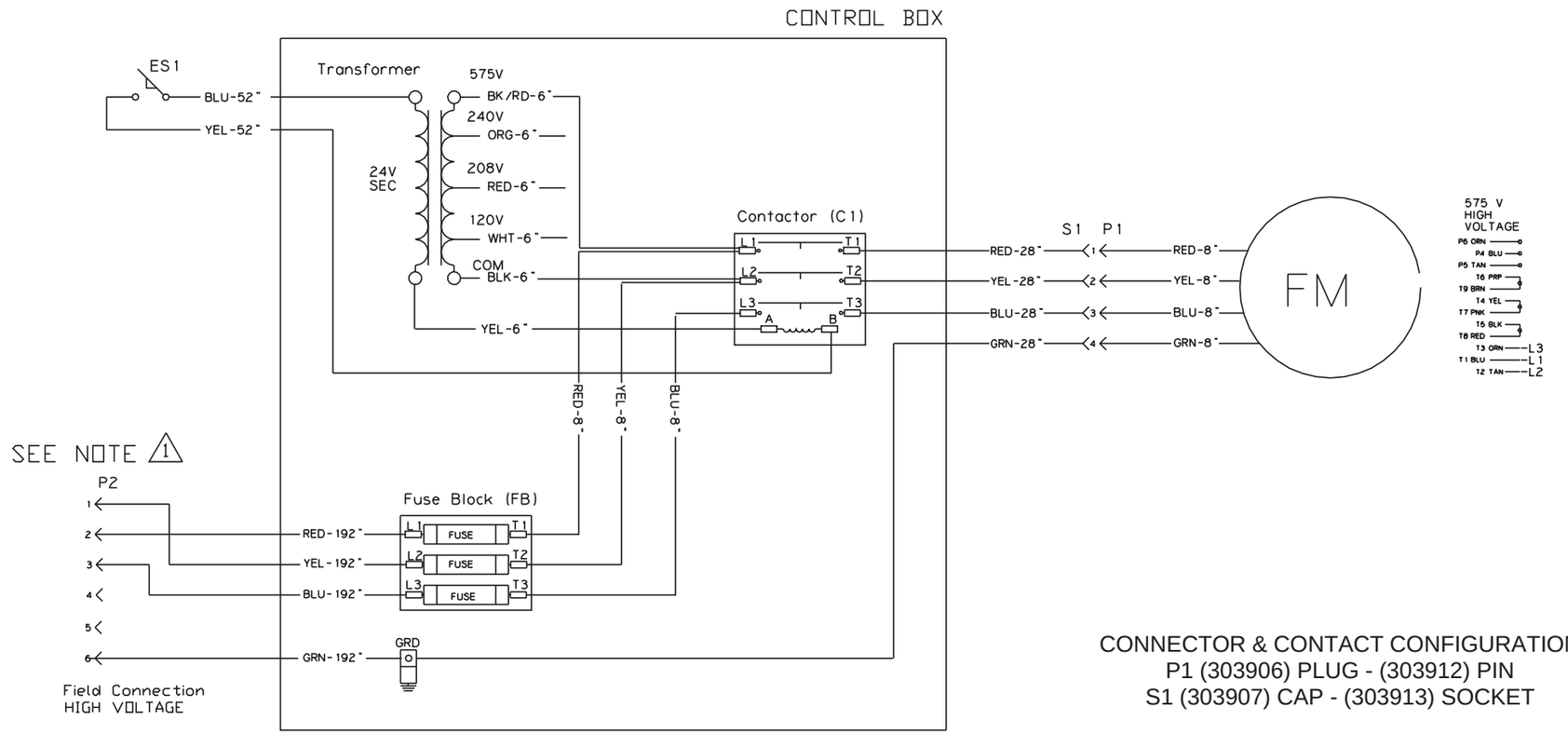

CONNECTOR & CONTACT CONFIGURATION
P1 (303906) PLUG - (303912) PIN
S1 (303907) CAP - (303913) SOCKET

Notes:

1 **For R4G(M,N)- 090/ 120 (R-22) Models - Connect high voltage 6 pin/4 wire wiring harness to unit supplied plug.**

For Q5SN- 090/120 (R-22) Models and R6GP, P6SP, and Q6SP – 072/090/120 (R410A) Models – Remove 6 pin/4 wire harness assembly from the "LINE" side of control fuse block and connect properly sized (Field Supplied) branch circuit wiring. See Table 1.

575 Volt 3 Phase Power Exhaust for
Q5SN and R4G(M,N)-090/120 and R6GP, P6SP, and
Q6SP-072/090/120 Units

RUSKIN® ROOFTOP SYSTEMS
2405 McIver Lane
Carrollton, Texas 75006
Phone: (972) 247-7447
Fax: (972) 243-0940

Date: July 1, 2009
Supercedes: 04-09-99
Drawn by: MGL
Unit #: 47-465-07-43
Diagram#: 4650743W
Approved by: