MATERIALS LIST		
QTY	RRS PART#	DESCRIPTION
66"	300000093	Wire 18 Ga. Green
288"	300000103	Wire 14 Ga. Red
288"	300000105	Wire 14 Ga. Yellow
288"	300000106	Wire 14 Ga. Blue
87"	300000107	Wire 14 Ga. Green
1	300000153	Fuse Holder - 3-Pole
3	300000166	Fuse - 4 AMP
1	300000183	Contactor - 30 AMP 3-ph 24V Coil
10	300000270	Spade 16/14 Ga. Wire
1	300000291	Amp 2 Cir Cap Conn Female
1	300000292	AMP 2 Cir Plug Conn Male
1	300000303	Lug - Ground
1	300000329	Blower - A12X12A Belt
6	300000418	Wire Nut (Orange)
2	300000582	Ring - Ground
2	300000584	Female ¼" Quick Disc. (Insul)
66"	30018420	Wire 18 Ga. Blue
3	30303906	AMP 4 Cir Plug Conn. Male
3	30303907	AMP 4 Cir Cap Conn. Female
12	30303912	AMP Pin Contact Male
12	30303913	AMP Socket Contact Female
20	380431695	Wire Ties - 3 ¾" L
1	410430030	V-Belt - 56"
1	610431474	Motor - 1 ½ HP 1725 RPM
1	700000038	Pulley - 12" Dia. x 1" Bore
1	700000055	Pulley(Vari) - 6" Dia. x 7/8" Bore

HIGH VOLTAGE HARNESS LEADS ARE 14 GA. WIRE

COMPONENT CODE

C1	Contactor	PL1	Field Harness Plug Male
FB	Fuse Block	PL2	Control Box Plug Male LV
FM	Fan Motor	S1	Control Box Female
F29	Fuse	S2	Unit Harness Cap Female
GRD	Ground		
J1	Power Exhaust Harness		
J2	Control Box Jack Female		
P1	Fan Harness Plug Male		
P2	Control Box Plug Male		

WIRE COLOR CODE

BLK	Black	BLU	Blue
BRN	Brown	GRN	Green
GRY	Grey	ORG	Orange
PNK	Pink	RED	Red
VIO	Violet	WHT	White
YEL	Yellow		

Revision	Change	Date
A	Redesign Unit	05-05-12
B	Added J1 Harness	08-13-12
C	Changed Title Block	12-06-13
D	Added Correct Drawing	06-10-16

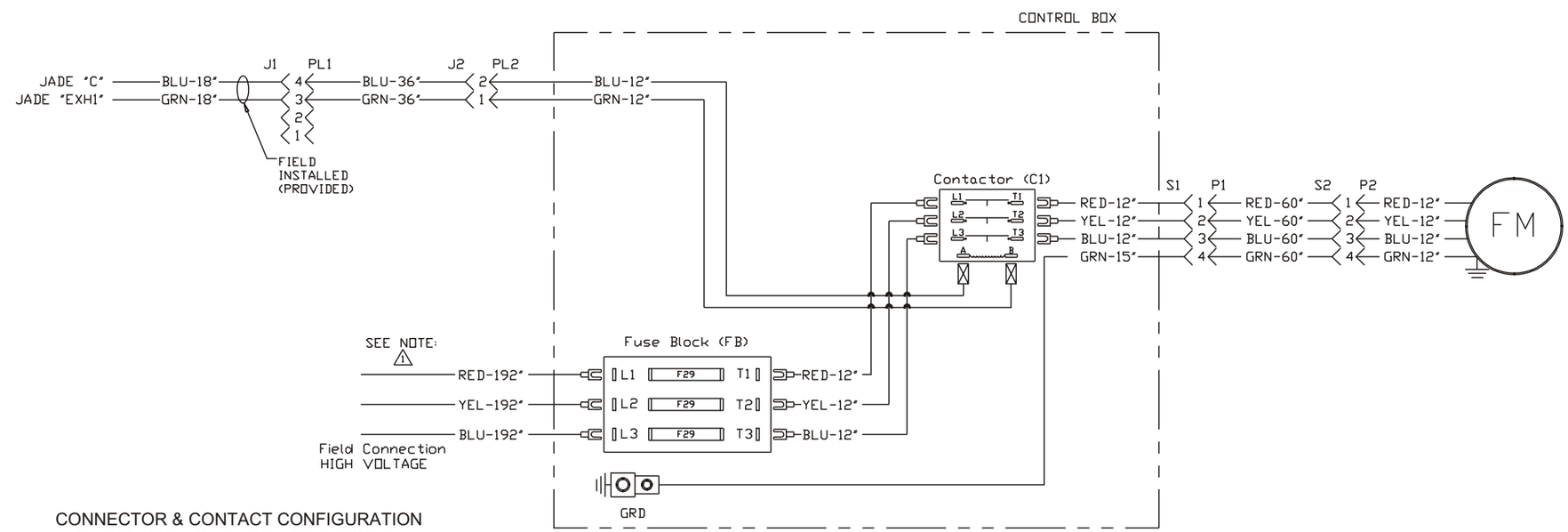

CONNECTOR & CONTACT CONFIGURATION
J2 (300000291) CAP - (30303913) SOCKET
P1/P2/PL1 (30303906) PLUG - (30303912) PIN
PL2 (300000292) PLUG - (30303912) PIN
J1/S1/S2 (30303907) CAP - (30303913) SOCKET

Notes:
1. Connect to load side of RTU blower contactor or separate power source.
2. Blower RPM is factory set at 665.
3. Connect harness to economizer logic module and power exhaust socket (J1)

575 Volt 3-Phase Power Exhaust for DCC / DCG / DCH 120

RRS ROOFTOP SYSTEMS
1625 Diplomat Drive
Carrollton, Texas 75006
Phone (972) 247-7447
Fax (972) 243-0940

Date: June 10, 2016
Supercedes: 12-06-13
Drawn by: MGL
Unit #: 10-455-10B-43
Diagram#: 1045510w
Approved by: