MATERIALS LIST		
QTY.	RSI PART#	DESCRIPTION
78"	303008	Wire 18 Ga. Gray
72"	303010	Wire 18 Ga. Brown
88"	303051	Wire 14 Ga. Red
88"	303053	Wire 14 Ga. Yellow
88"	303054	Wire 14 Ga. Blue
44"	303055	Wire 14 Ga. Green
1	303371	Fuse Holder - 3-Pole
3	303379	Fuse - 5 AMP
1	303405	Contactor - 30 AMP 3-Pole 3-ph 24V Coil
2	303593	Ring - Ground
4	303599	Pigtail Connector
3	303602	Female ¼" Quick Disc. (Red)
4	303605	Female ¼" Quick Disc. (Red)
2	303606	Spade - 18 Ga. Wire
4	303609	Wire Nut (Orange)
3	303612	Spade 16/14 Ga. Wire
9	303616	Female ¼" Quick Disc. (Blue)
20	303620	Wire Ties - 3 3/4"L
1	303682	Motor - 1 HP 1725 RPM
1	303727	Blower - A12X12A Belt
1	303804	Pulley - 12" Dia. x 1" Bore
1	303814	Pulley(Vari) - 4.75" Dia. x 5/8" Bore
1	303855	V-Belt - 55"
1	303900	AMP 3 Cir Plug Conn. Male
2	303906	AMP 4 Cir Plug Conn. Male
2	303907	AMP 4 Cir Cap Conn. Female
16	303912	AMP Pin Contact Male
13	303913	AMP Socket Contact Female
1	303950	AMP 6 Cir Plug Conn Male
1	303951	Amp 6 Cir Cap Conn Female
1	303960	Lug - Ground

E# = WIRE END DESIGNATION
E2 STUD #6 18 Ga. Wire
E3 Female ¼ Quick Disc.
E4 Male ¼ Quick Disc. Insul
E6 Wire Nut Size 73B

HIGH VOLTAGE HARNESS LEADS ARE 14 GA. WIRE

COMPONENT CODE

C1	Contactor	S1	Control Box Female
FB	Fuse Block	S2	Unit Harness Cap Female
FM	Fan Motor	S3	Fan Harness Cap Female
F29	Fuse		
GRD	Ground		
P1	Fan Harness Plug Male		
P2	Control Box Plug Male		
P3	Fan Motor Plug Male		
P12	Unit Harness Plug Male		

WIRE COLOR CODE

BK/RD	Black/Red	BLK	Black
BLU	Blue	BRN	Brown
GRN	Green	GRY	Gray
ORG	Orange	RED	Red
WHT	White	YEL	Yellow

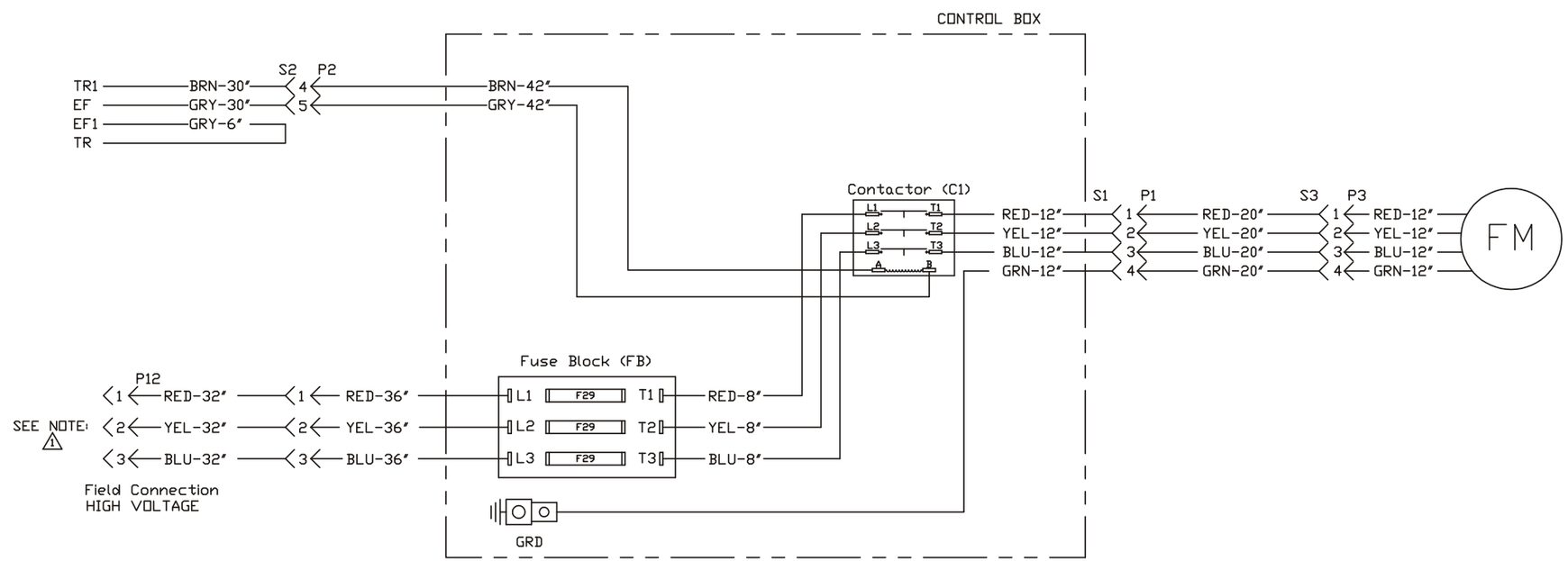

CONNECTOR & CONTACT CONFIGURATION
P1 (303906) PLUG - (303912) PIN
S1 (303909) CAP - (303913) SOCKET

Notes:
1. Connect harness into RTU Power Exhaust socket (S12).
2. Blower RPM is factory set at 573.

460 Volt 3-Phase Power Exhaust for DM/DH 090

Rooftop Systems, Inc.
2405 McIver Lane
Carrollton, Texas 75006
Phone (972) 247-7447
Fax (972) 243-0940

Date: July 15, 2003
Supercedes: 02-06-03
Drawn by:
Unit # 80-455-29B-33
Diagram# 4552933W