MATERIALS LIST		
QTY.	RSI PART#	DESCRIPTION
76"	303001	Wire 18 Ga. Green
78"	303002	Wire 18 Ga. Violet
98"	303003	Wire 18 Ga. Yellow
54"	303004	Wire 18 Ga. Black
120"	303005	Wire 18 Ga. White
112"	303006	Wire 18 Ga. Blue
98"	303008	Wire 18 Ga. Gray
164"	303010	Wire 18 Ga. Brown
1	303140	Enthalpy Control
1	303300	#3/HW Motor
1	303302	Mixed Air Sensor
1	303303	Logic Module
1	303510	TB-11 Board
1	303511	Terminal Block #7
1	303512	Terminal Marker #7
7	303606	Stud #6 18 Ga.
1	303597	Male ¼" Quick Disc Insul - Red
1	303604	Male ¼" Push On Adaptor
18	303605	Female ¼" Quick Disc. - Red
5	303607	Female 3/16 Quick Disc. - Red
10	303620	Wire Ties 4" L
1	303903	AMP 9 Cir Plug Conn Male
1	303904	AMP 9 Cir Cap Conn Female
5	303912	AMP Pin Contact Male
5	303913	AMP Socket Contact Female
1	303596	Female ¼" Quick Disc Insul - Red
1	303615	Female ¼" Quick Disc Insul - Blue
1	303402	Relay DPDT 24v

HARNESS DETAIL

E# = WIRE END DESIGNATION

E2 STUD #6 18 Ga. Wire
E3 Female ¼ Quick Disc.
E4 Male ¼ Quick Disc. Insul
E6 Wire Nut Size 73B
E7 Raw End
E8 Female 3/16 Quick Disc.
E9 Female ¼ Quick Disc. Insul

	E2	BRN	44	S1 <1
	E2	GRA	44	<2
	E2	WHT	44	<3
E2—4	E9/E4	YEL	44	<4
	E2	BLU	44	<5

COMPONENT CODE

C7400A	Fresh Air Sensor
M8405A	Damper Actuator 24v
T6031H	Mixed Air Sensor
W7459C	Logic Module
P1	Economizer Plug
S1	Unit Economizer Plug
TB-11	Terminal Board

WIRE COLOR CODE

BLK	Black	BLU	Blue
BRN	Brown	GRA	Gray
GRN	Green	ORN	Orange
VIO	Violet	WHT	White
YEL	Yellow		

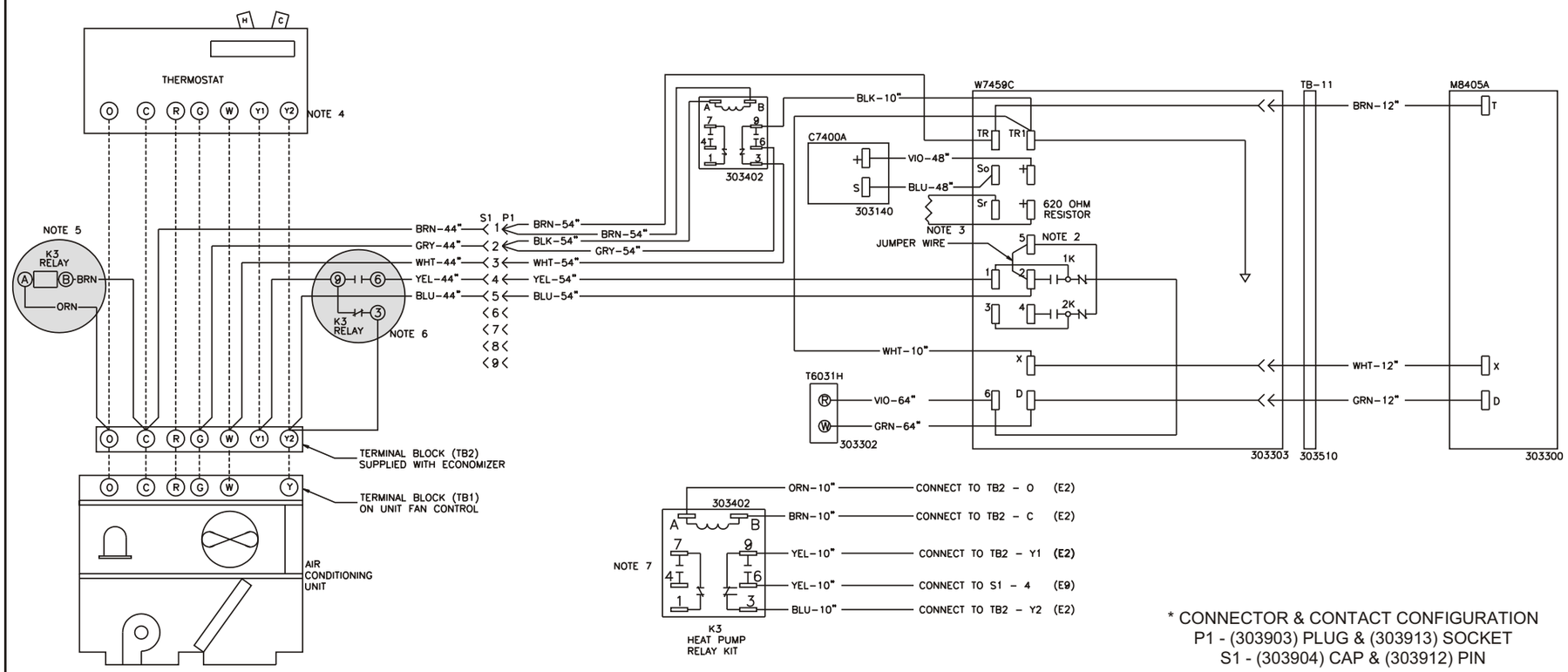

* CONNECTOR & CONTACT CONFIGURATION
P1 - (303903) PLUG & (303913) SOCKET
S1 - (303904) CAP & (303912) PIN

Notes:
1. Unit wiring shown as reference only. Check unit wiring for actual unit wiring.
2. Relays 1K and 2K actuate when the Outdoor Air Enthalpy is lower than the Return Air Enthalpy.
3. Factory installed resistor should be removed only if C7400 differential enthalpy sensor is added.
4. Y2 must be energized for the compressor to operate during economizer operation.
5. Shaded area is for heat pump unit. Relay kit (80-RKIT-24). Terminal "O" is on Heat Pump only.
6. Normally open contact (K3-1) refers to relay kit.
7. Details of heat pump relay kit.

Horizontal 3-Position Economizer
D*NA/EB/B*HA 018-060

Rooftop Systems, Inc.
2405 McIver Lane
Carrollton, Texas 75006
Phone (972) 247-7447
Fax (972) 243-0940

Date: April 6, 2004
Supercedes: 11-04-99
Drawn by:
Unit # 80-325-24
Diagram # 32524W