MATERIALS LIST		
QTY	RSI PART#	DESCRIPTION
1	128000041	Bushing Plug .437 ID
132"	300000093	Wire 18 Ga. Green
42"	300000096	Wire 18 Ga. Gray
236"	300000103	Wire 14 Ga. Red
236"	300000105	Wire 14 Ga. Yellow
236"	300000106	Wire 14 Ga. Blue
36"	300000107	Wire 14 Ga. Green
1	300000153	Fuse Holder
3	300000168	Fuse 3 AMP
1	300000183	Contactor - 30 AMP 3-Pole 3-ph
1	300000303	Lug - Ground
1	300000329	Blower A12 x 12ACE
4	300000418	Wire Nut (Orange)
2	300000582	Butted Seam Ring
4	300000584	Female ¼" Quick Disc. (Insul)
12	300000588	Spade 16/14 Ga. Wire
132"	30018319	Wire 18 Ga. Black
60"	30018521	Wire 18 Ga. Brown
2	30303906	AMP 4 Cir Plug Conn. Male
1	30303907	AMP 4 Cir Cap Conn. Female
6	30303912	AMP Pin Contact Male
4	30303913	AMP Socket Contact Female
20	380431695	Wire Ties - 3 ¾" L
1	410430064	Belt - 49"
1	610431480	Motor - 1 HP 1725 RPM
1	700000038	Pulley 12" Dia. x 1" Bore
1	700000045	Pulley 4.75" Dia x ⅝" Bore (Variable)
1	900500098	Base Mount

HARNESS DETAIL

HARNESS LEADS ARE 14 GA. WIRE WITH NO END DESIGNATION

COMPONENT CODE

C1	Contactor
DS1	Door Switch
ES1	End Switch
FB	Fuse Block
FM	Fan Motor
GRD	Ground
P1	Fan Plug Male
P24	Plug Male
S1	Control Box Female

WIRE COLOR CODE

BLK	Black	BLU	Blue
BRN	Brown	GRN	Green
GRY	Grey	ORG	Orange
PNK	Pink	RED	Red
VIO	Violet	WHT	White
YEL	Yellow		

Revision	Change	Date
EWR 1299	Split CFM Range	01-12-10
A	Changed Wiring Diagram	11-16-15

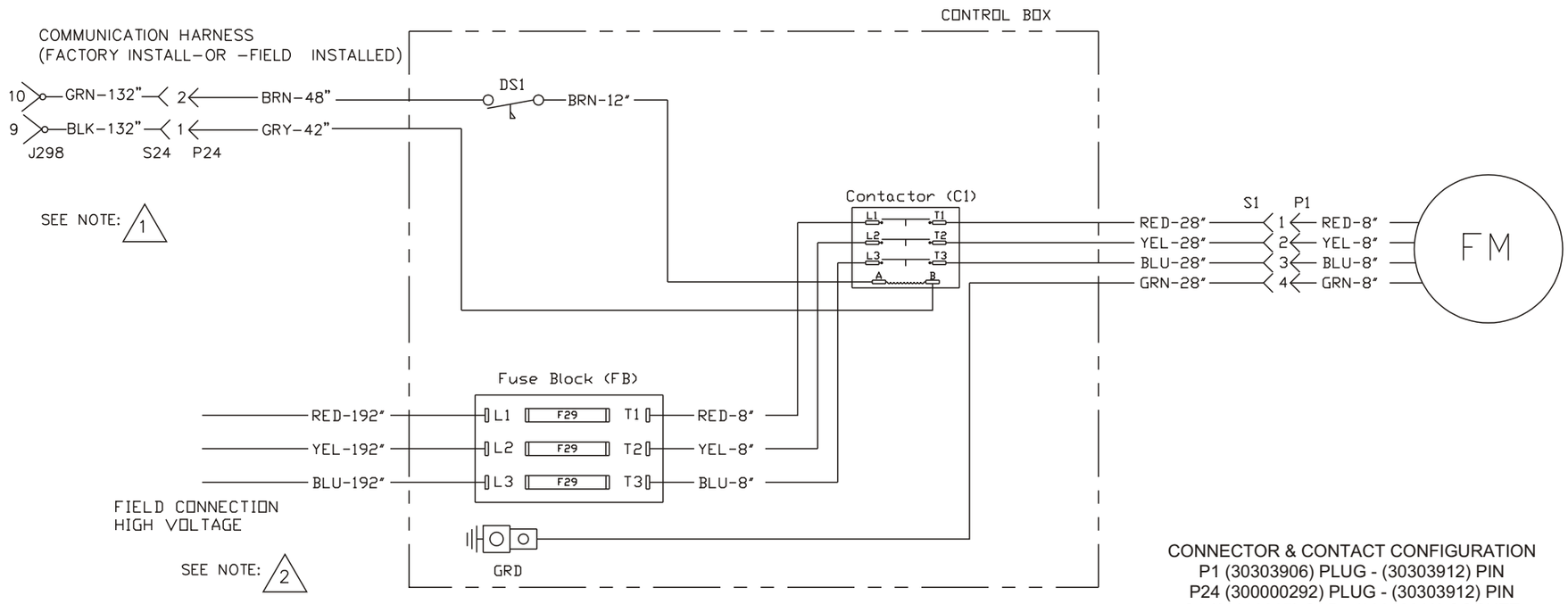

CONNECTOR & CONTACT CONFIGURATION
P1 (30303906) PLUG - (30303912) PIN
P24 (300000292) PLUG - (30303912) PIN
S1 (30303907) CAP - (30303913) SOCKET
S24 (300000291) CAP - (30303913) SOCKET

Notes:
1. Communication harness to be run from RTU "M2" control board thru hole drilled in panel and connect to P24.
2. High voltage source is field provided as separate connection.
3. Blower RPM is factory set at 595.

575 Volt 3-Phase Power Exhaust for ENERGENCE 092

RRS ROOFTOP SYSTEMS
1625 Diplomat Drive
Carrollton, Texas 75006
Phone (972) 247-7447
Fax (972) 243-0940

Date: November 16, 2015	
Supercedes: 01-12-11	
Drawn by: MGL	
Unit #: 50-455-51A-43	
Diagram#: 5045551w	
Approved by:	