MATERIALS LIST		
QTY.	PART#	DESCRIPTION
144"	303000	Wire 18 Ga. Red
68"	303002	Wire 18 Ga. Purple
136"	303003	Wire 18 Ga. Yellow
156"	303004	Wire 18 Ga. Black
132"	303005	Wire 18 Ga. White
188"	303006	Wire 18 Ga. Blue
132"	303008	Wire 18 Ga. Gray
24"	303010	Wire 18 Ga. Brown
1	303140	Enthalpy Control
1	303300	#3/HW Motor
1	303302	Mixed Air Sensor
1	303303	Logic Module
1	303510	TB-11 Terminal Board
1	303604	¼" Slip-on Adaptor Male
21	303605	Female ¼ Quick Disc. (Red)
2	303606	#6 Spade 22/16 Ga.
3	303609	Wire Nut (Orange)
20	303620	Wire Ties 4" L
1	303903	AMP 9 Cir Plug Conn Male
1	303904	AMP 9 Cir Cap Conn Female
1	303909	AMP 2 Cir Cap Conn Female
1	303910	AMP 2 Cir Plug Conn Male
11	303912	AMP Pin Contact Male
11	303913	AMP Socket Contact Female

HARNESS DETAIL

E# = WIRE END DESIGNATION
E2 STUD #6 18 Ga. Wire
E3 Female ¼ Quick Disc.
E4 Male ¼ Quick Disc. Insul
E6 Wire Nut

HARNESS CONNECTS AT (PPM2A) ECONOMIZER PLUG

COMPONENT CODE

Economizer
C7400A Fresh Air Sensor
T6031H Mixed Air Sensor
M8405A Damper Actuator 24v
TB-11 Terminal Board
W7459C Logic Module

WIRE COLOR CODE

BLK	Black	BLU	Blue
BRN	Brown	GRN	Green
GRY	Gray	ORN	Orange
VIO	Purple	RED	Red
WHT	White	YEL	Yellow

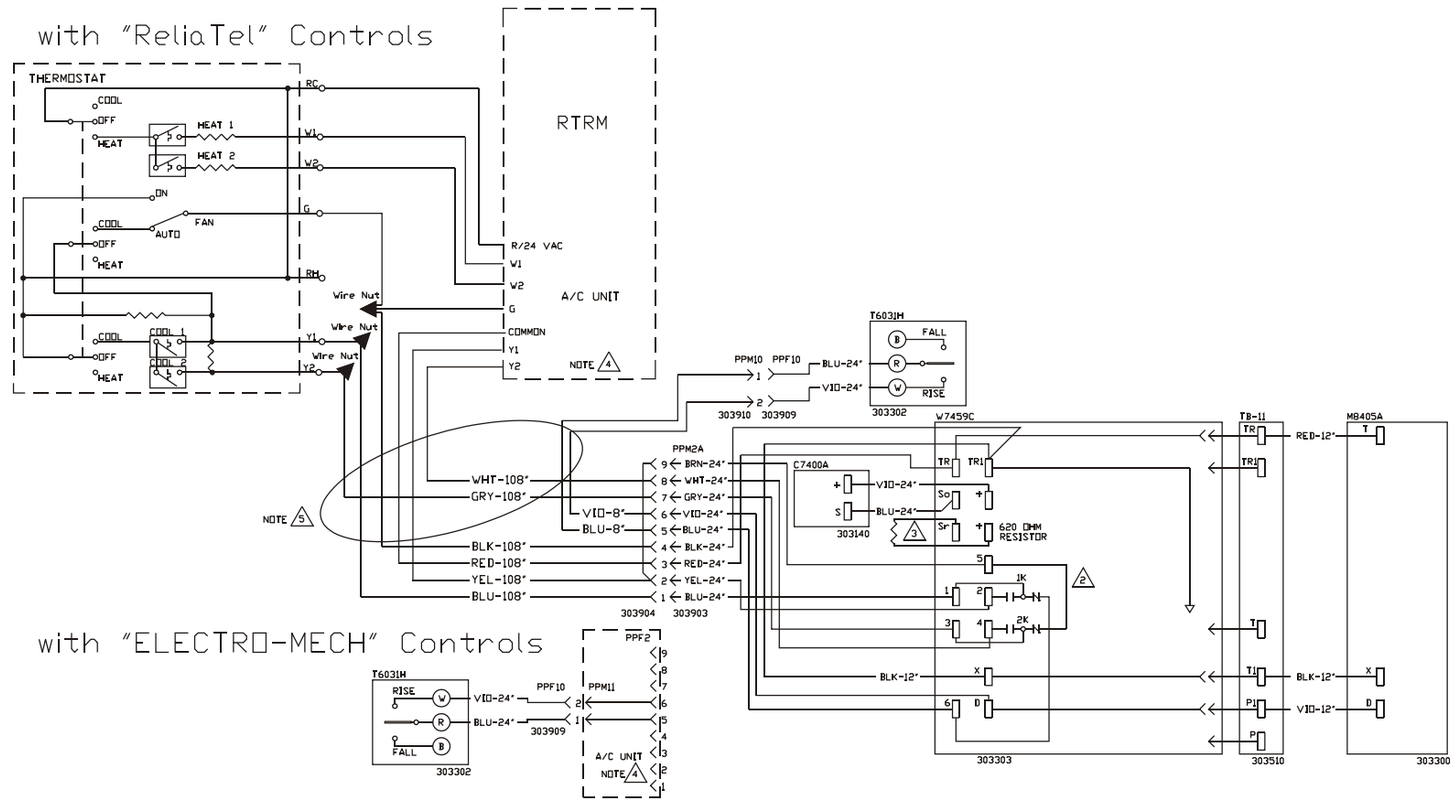

Notes:
1. Unit wiring shown as reference only. Check unit wiring for actual unit wiring.
2. Relays 1K and 2K actuate when the Outdoor Air Enthalpy is higher than the Return Air Enthalpy.
3. Factory installed resistor should be removed only if C7400 Differential Enthalpy Sensor is added.
4. Y2 must be energized for the compressor to operate.
5. Provided field harness for Relia Tel Control (field installed).

3-Position Economizer for Trane
(Relia Tel and Electro-Mech.)
YSC / TSC / WSC 036A-H / 048A-H / 060A-H
YHC / THC / WHC 036A-H / 048A-H / 060A-L,M,H Units

Rooftop Systems, Inc.
2405 McIver Lane
Carrollton, Texas 75006
Phone (972) 247-7447
Fax (972) 243-0940

Date: January 28, 2004
Supercedes: 06-13-03
Drawn by:
Unit # 70-365-25
Diagram# 36525W