MATERIALS LIST		
QTY.	PART#	DESCRIPTION
12"	303000	Wire 18 Ga. Red
108"	303001	Wire 18 Ga. Green
68"	303002	Wire 18 Ga. Purple
336"	303003	Wire 18 Ga. Yellow
48"	303004	Wire 18 Ga. Black
48"	303005	Wire 18 Ga. White
104"	303006	Wire 18 Ga. Blue
216"	303007	Wire 18 Ga. Orange
1	303100	#1/HW Motor
1	303101	Logic Module
1	303103	Mixed Air Sensor
1	303140	Enthalpy Control
1	303510	TB-11 Terminal Board
29	303605	Female ¼ Quick Disc. (Red)
3	303609	Wire Nut (Orange)
10	303620	Wire Ties 4" L
1	303903	AMP 9 Cir Plug Conn Male
1	303904	AMP 9 Cir Cap Conn Female
1	303909	AMP 2 Cir Cap Conn Female
1	303910	AMP 2 Cir Plug Conn Male
11	303912	AMP Pin Contact Male
11	303913	AMP Socket Contact Female

HARNESS DETAIL

E# = WIRE END DESIGNATION
E2 STUD #6 18 Ga. Wire
E3 Female ¼ Quick Disc.
E4 Male ¼ Quick Disc. Insul
E6 Wire Nut

HARNESS CONNECTS AT (PPM2A) ECONOMIZER PLUG

COMPONENT CODE

Economizer
C7400A Fresh Air Sensor
C7150B Mixed Air Sensor
M7415A Damper Actuator 24v
TB-11 Terminal Board
W7459A Logic Module

WIRE COLOR CODE

BK	Black	BL	Blue
BR	Brown	GR	Green
GY	Gray	OR	Orange
PU	Purple	RD	Red
WT	White	YL	Yellow

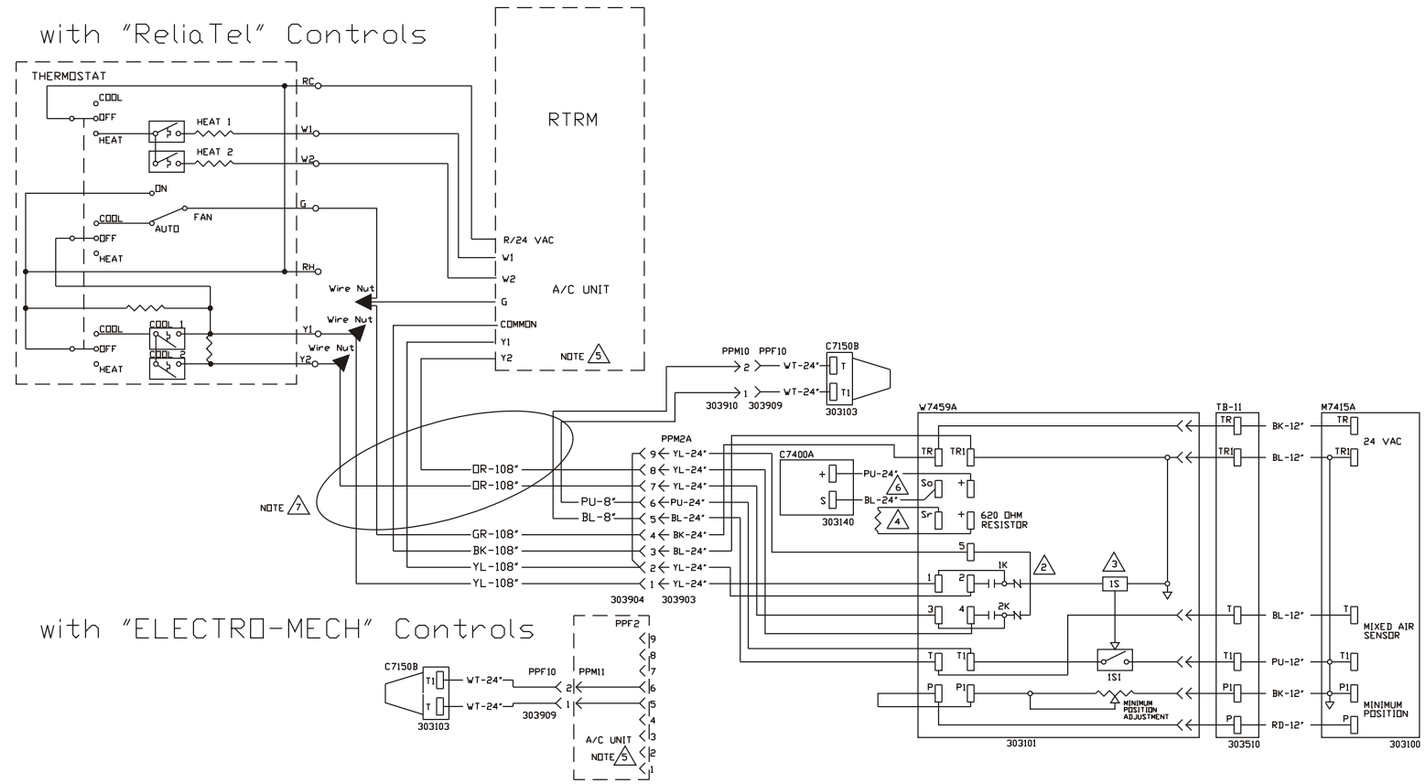

Notes:
1. Unit wiring shown as reference only. Check unit wiring for actual unit wiring.
2. Relays 1K and 2K actuate when the Outdoor Air Enthalpy is higher than the Return Air Enthalpy.
3. 1S is an electronic switch which closes when powered by a 24 VAC input.
4. Factory installed resistor should be removed only if C7400 Differential Enthalpy Sensor is added.
5. Y2 must be energized for the compressor to operate.
6. Connect wires to logic module.
7. Provided field harness for "Relia Tel" control (field installed).

Modulating Economizer For Trane
(Relia Tel and Electro-Mech.)
YSC 072A / 090A / 092A / YHC / THC 072A
TSC / WSC 072A / 090A Units

Rooftop Systems, Inc.
2405 McIver Lane
Carrollton, Texas 75006
Phone (972) 247-7447
Fax (972) 243-0940

Date: January 26, 2004
Supercedes: 06-13-03
Drawn by:
Unit # 70-364-26
Diagram# 36426w