MATERIALS LIST		
QTY	RSI PART#	DESCRIPTION
30"	300000091	Wire 18 Ga. Red
62"	300000093	Wire 18 Ga. Green
136"	300000094	Wire 18 Ga. Violet
24"	300000095	Wire 18 Ga. White
3	300000262	¼" Male Quick Disc. Insul.
1	300000582	Butt Ring
20	300000965	AMP Pin Contact
6	300000966	AMP 2 Cir JADE
1	300000967	AMP 3 Cir JADE
3	300000968	AMP 4 Cir JADE
214"	30018319	Wire 18 Ga. Black
152"	30018420	Wire 18 Ga. Blue
66"	30018521	Wire 18 Ga. Brown
56"	30018622	Wire 18 Ga. Orange
118"	30018718	Wire 18 Ga. Yellow
1	30303598	Ground Ring
1	30303903	AMP 9 Cir Plug Conn. Male
7	30303912	AMP Pin Contact Male
1	38177700	Ground Screw - Green

MATERIALS LIST FOR 10-365-09C		
QTY	RSI PART#	DESCRIPTION
1	37000066	Logic Module - W7220A
		Dry Bulb/Mixed Air Sensor - C7250A
		Damper Actuator 44Lb - MS3105J

MATERIALS LIST FOR 10-366-09C		
QTY	RSI PART#	DESCRIPTION
1	37000068	Logic Module - W7220A
		Fresh Air Sensor - C7400S
		Mixed Air Sensor - C7250A
		HW Actuator 44 lb - MS3105J

CONNECTOR & CONTACT CONFIGURATION

PLF1 PLUG 30303903 PIN 30303912

COMPONENT CODE

C7250A	Dry Bulb Sensor (Option)
C7250A	Mixed Air Sensor
C7400S	Enthalpy Air Sensor
MS3105J	Damper Actuator 24v
PLF2	Male Economizer Plug
W7220A	Logic Module

WIRE COLOR CODE

BLK	Black	BLU	Blue
BRN	Brown	GRN	Green
GRY	Gray	ORG	Orange
PNK	Pink	RED	Red
TAN	Tan	VIO	Violet
WHT	White	YEL	Yellow

Revision	Change	Date
A	Change MAS wire lengths	06-29-15
B	Changed actuator/sensor part#s	01-23-18
C	Changed actuator wire length	06-13-18
D	Changed Y-Packs	02-05-19

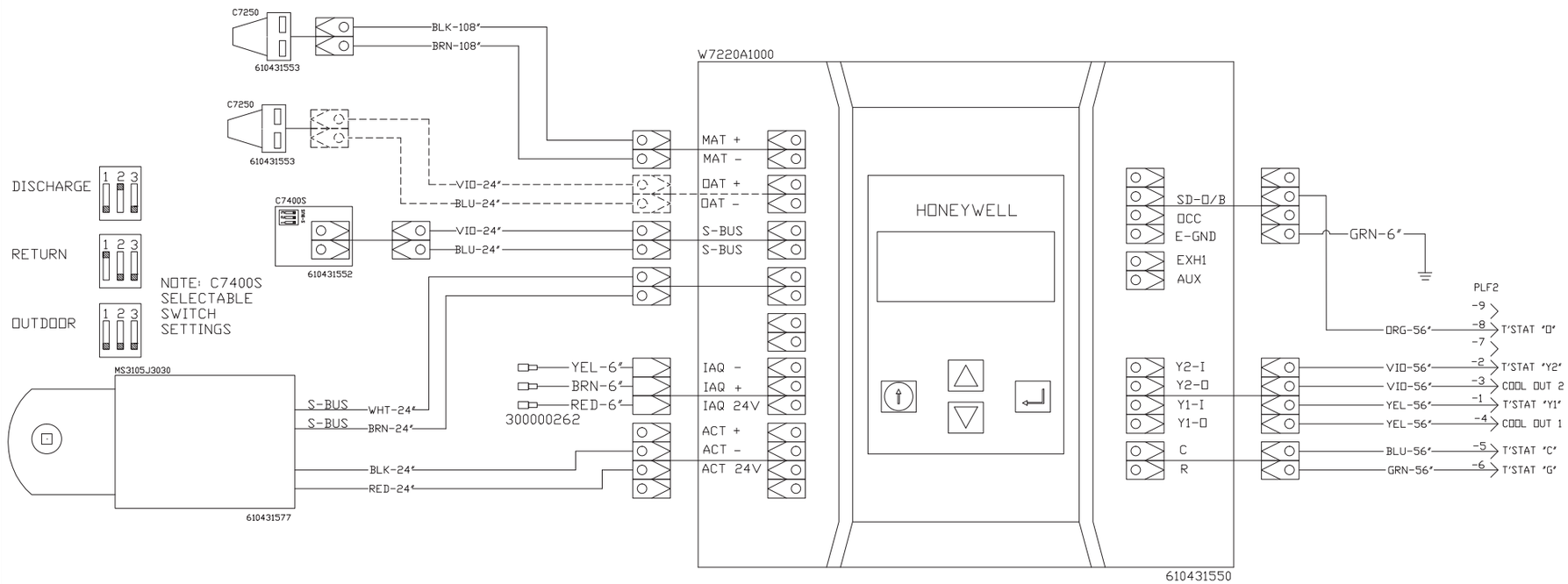

Note:
1. **When 10-366-09C is ordered use C7400S harness and must be located in plug marked S-BUS.**
2. **When 10-365-09C is ordered use C7250 harness and must be located in plug marked OAT. (Dotted Lines)**

Notes:
1. **Unit wiring shown as reference only. Check unit wiring for actual unit wiring.**
2. **When ordering Dry Bulb Economizer the C7400S enthalpy sensor is replaced with the C7250A dry bulb sensor ("365").**

Modulating Gear Economizer
DCC / DCG / DCH 036-072

RRS ROOFTOP SYSTEMS
1625 Diplomat Drive
Carrollton, Texas 75006
Phone (972) 247-7447
Fax (972) 243-0940

Date: February 5, 2019
Supersedes: 06-13-18
Drawn by: JP
Unit #: 10-366/365-09C
Diagram#: 1036609CW
Approved by: