MATERIALS LIST		
QTY.	RSI PART#	DESCRIPTION
42"	303008	Wire 18 Ga. Gray
60"	303010	Wire 18 Ga. Brown
236"	303051	Wire 14 Ga. Red
236"	303053	Wire 14 Ga. Yellow
236"	303054	Wire 14 Ga. Blue
36"	303055	Wire 14 Ga. Green
2	303090	Tape - Electrical
1	303309	Switch - Interlock
1	303371	Fuse Holder
3	303387	Fuse 2 AMP
1	303405	Contactor - 30 AMP 3-Pole 3-ph 24V Coil
1	303440	Motor Mount Base
2	303598	Ring Grd.
4	303605	Female ¼" Quick Disc. (Red)
4	303609	Wire Nut (Orange)
3	303612	Spade 16/14 Ga. Wire
9	303616	Female ¼" Quick Disc. (Blue)
20	303620	Wire Ties - 3 ¾" L
1	303698	Motor - ½ HP 1725 RPM
1	303731	Blower 9 x 10 AT"
1	303817	Pulley 7" Dia. X ¾" Bore
1	303810	Pulley 3.15" Dia x 5/8" Bore
1	303842	Belt - 42"
2	303906	AMP 4 Cir Plug Conn. Male
1	303907	AMP 4 Cir Cap Conn. Female
8	303912	AMP Pin Contact Male
4	303913	AMP Socket Contact Female
1	303960	Ground Lug

HARNESS DETAIL

E# = WIRE END DESIGNATION
E2 STUD #6 18 Ga. Wire
E3 Female ¼ Quick Disc.
E4 Male ¼ Quick Disc. Insul
E6 Wire Nut Size 73B

HARNESS LEADS ARE 14 GA. WIRE WITH NO END DESIGNATION

COMPONENT CODE

C1	Contactor
DS1	Switch - Interlock
FB	Fuse Block
FM	Fan Motor
GRD	Ground
P1	Fan Plug Male
P18	Power Exhaust Plug Male
PS1	Control Box Female

WIRE COLOR CODE

BLK	Black	BLU	Blue
BRN	Brown	GRN	Green
GRY	Gray	ORG	Orange
RED	Red	VIO	Violet
WHT	White	YEL	Yellow
BK/RD	Black/Red		

Revision	Change	Date

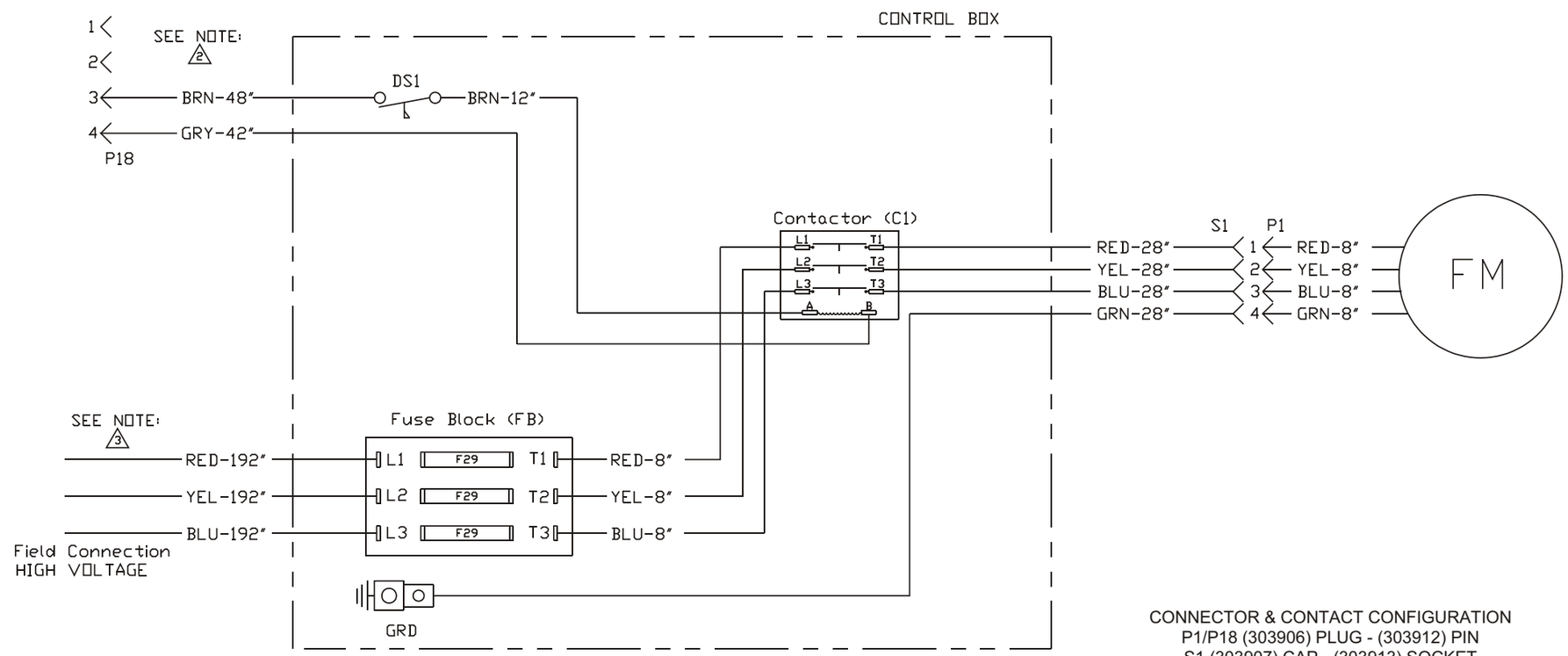

CONNECTOR & CONTACT CONFIGURATION
P1/P18 (303906) PLUG - (303912) PIN
S1 (303907) CAP - (303913) SOCKET

Notes:
1. Blower RPM is factory set at 691.
2. Connect P18 into economizer J18
3. Line voltage is provided through a separate power source from the rooftop unit or from the load side of the rooftop unit. Disconnect if wire size has been selected to handle MCA of both rooftop unit and power exhaust.

575 Volt 3-Phase Power Exhaust for
TCA / TGA / THA 048

Rooftop Systems, Inc.
2405 McIver Lane
Carrollton, Texas 75006
Phone (972) 247-7447
Fax (972) 243-0940

Date: July 1, 2008
Supercedes:
Drawn by:
Unit # 51-455-44B-43
Diagram# 4554423W